MC10H424

Quad TTL to ECL Translator with ECL Strobe

The MC10H424 is a Quad TTL–to–ECL translator with an ECL strobe. Power supply requirements are ground, +5.0 volts, and –5.2 volts.

- Propagation Delay, 1.5 ns Typical
- Improved Noise Margin 150 mV (Over Operating Voltage and Temperature Range)
- Voltage Compensated
- MECL 10K – Compatible

LOGIC DIAGRAM

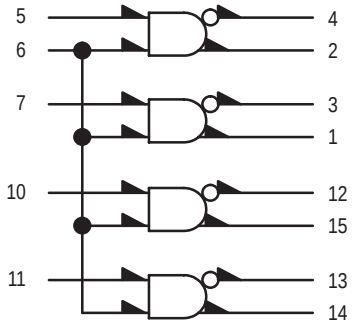

GND = PIN 16
V_{CC} (+5.0 VDC) = PIN 9
V_{EE} (–5.2 VDC) = PIN 8

DIP PIN ASSIGNMENT

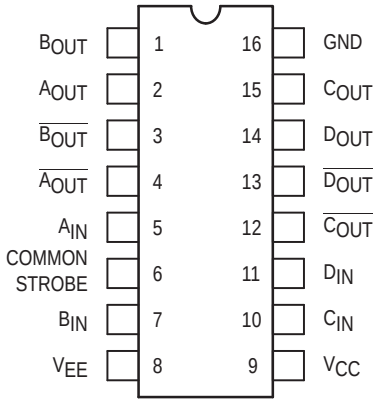

Pin assignment is for Dual–in–Line Package.
For PLCC pin assignment, see the Pin Conversion Tables on page 18 of the ON Semiconductor MECL Data Book (DL122/D).

ON Semiconductor

http://onsemi.com

MARKING DIAGRAMS

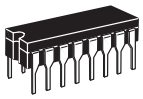

CDIP–16
L SUFFIX
CASE 620

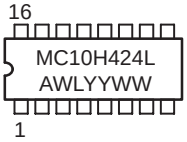

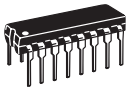

PDIP–16
P SUFFIX
CASE 648

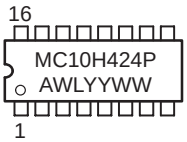

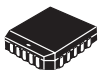

PLCC–20
FN SUFFIX
CASE 775

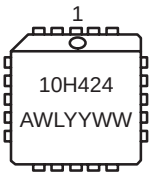

A = Assembly Location
WL = Wafer Lot
YY = Year
WW = Work Week

ORDERING INFORMATION

Device	Package	Shipping
MC10H424L	CDIP–16	25 Units/Rail
MC10H424P	PDIP–16	25 Units/Rail
MC10H424FN	PLCC–20	46 Units/Rail

March, 2000 – Rev. 6
Publication Order Number:
MC10H424/D

MAXIMUM RATINGS

Symbol	Characteristic	Rating	Unit
V_{EE}	Power Supply (V_{CC} = 5.0 V)	–8.0 to 0	Vdc
V_{CC}	Power Supply (V_{EE} = – 5.2 V)	0 to +7.0	Vdc
V_I	Input Voltage (ECL)	0 to V_{EE}	Vdc
V_I	Input Voltage (TTL)	0 to V_{CC}	Vdc
I_{out}	Output Current – Continuous – Surge	50 100	mA
T_A	Operating Temperature Range	0 to +75	°C
T_{stg}	Storage Temperature Range – Plastic – Ceramic	–55 to +150 –55 to +165	°C

ELECTRICAL CHARACTERISTICS (V_{EE} = –5.2 V ± 5%, V_{CC} = 5.0 V ± 5.0%)

Symbol	Characteristic	0°		25°		75°		Unit
		Min	Max	Min	Max	Min	Max	
I_E	Negative Power Supply Drain Current	–	72	–	66	–	72	mAdc
I_{CCH}	Positive Power Supply Drain Current	–	16	–	16	–	18	mAdc
I_{CCL}		–	25	–	25	–	25	mAdc
I_R	Reverse Current Pin 5,7,10,11	–	50	–	50	–	50	µAdc
I_F	Forward Current Pin 5,7,10,11	–	–3.2	–	–3.2	–	–3.2	mAdc
I_{inH}	Input HIGH Current Pin 6	–	450	–	310	–	310	µAdc
I_{inL}	Input LOW Current Pin 6	0.5	–	0.5	–	0.3	–	µAdc
$V_{(BR)in}$	Input Breakdown Voltage	5.5	–	5.5	–	5.5	–	Vdc
V_I	Input Clamp Voltage	–	–1.5	–	–1.5	–	–1.5	Vdc
V_{OH}	High Output Voltage	–1.02	–0.84	–0.98	–0.81	–0.92	–0.735	Vdc
V_{OL}	Low Output Voltage	–1.95	–1.63	–1.95	–1.63	–1.95	–1.60	Vdc
V_{IH}	High Input Voltage Pin 5,7,10,11	2.0	–	2.0	–	+2.0	–	Vdc
V_{IL}	Low Input Voltage Pin 5,7,10,11	–	0.8	–	0.8	–	0.8	Vdc
V_{IH}	High Input Voltage Pin 6	–1.17	–0.84	–1.13	–0.81	–1.07	–0.735	Vdc
V_{IL}	Low Input Voltage Pin 6	–1.95	–1.48	–1.95	–1.48	–1.95	–1.45	Vdc

AC PARAMETERS

Propagation Delay	t_{pd}							ns
Data		0.5	2.2	0.5	2.3	0.5	2.4	
Strobe		0.5	2.2	0.5	2.3	0.5	2.4	
Rise Time	t_r	0.5	2.0	0.5	2.0	0.5	2.2	ns
Fall Time	t_f	0.5	2.0	0.5	2.0	0.5	2.2	ns

NOTE:
Each MECL 10H series circuit has been designed to meet the dc specifications shown in the test table, after thermal equilibrium has been established. The circuit is in a test socket or mounted on a printed circuit board and transverse air flow greater than 500 lfpm is maintained. Outputs are terminated through a 50–ohm resistor to –2.1 volts.

APPLICATIONS INFORMATION

The MC10H424 has TTL–compatible inputs, an ECL strobe and MECL complementary open–emitter outputs that allow use as an inverting/non–inverting translator or as a differential line driver. When the common strobe input is at the low–logic level, it forces all true outputs to a MECL low–logic state and all inverting outputs to a MECL high–logic state.

An advantage of this device is that TTL–level information can be transmitted differentially, via balanced twisted pair lines, to MECL equipment, where the signal can be received by the MC10H115 or MC10H116 differential line receivers.

PACKAGE DIMENSIONS

PLCC–20
FN SUFFIX
PLASTIC PLCC PACKAGE
CASE 775–02
ISSUE C

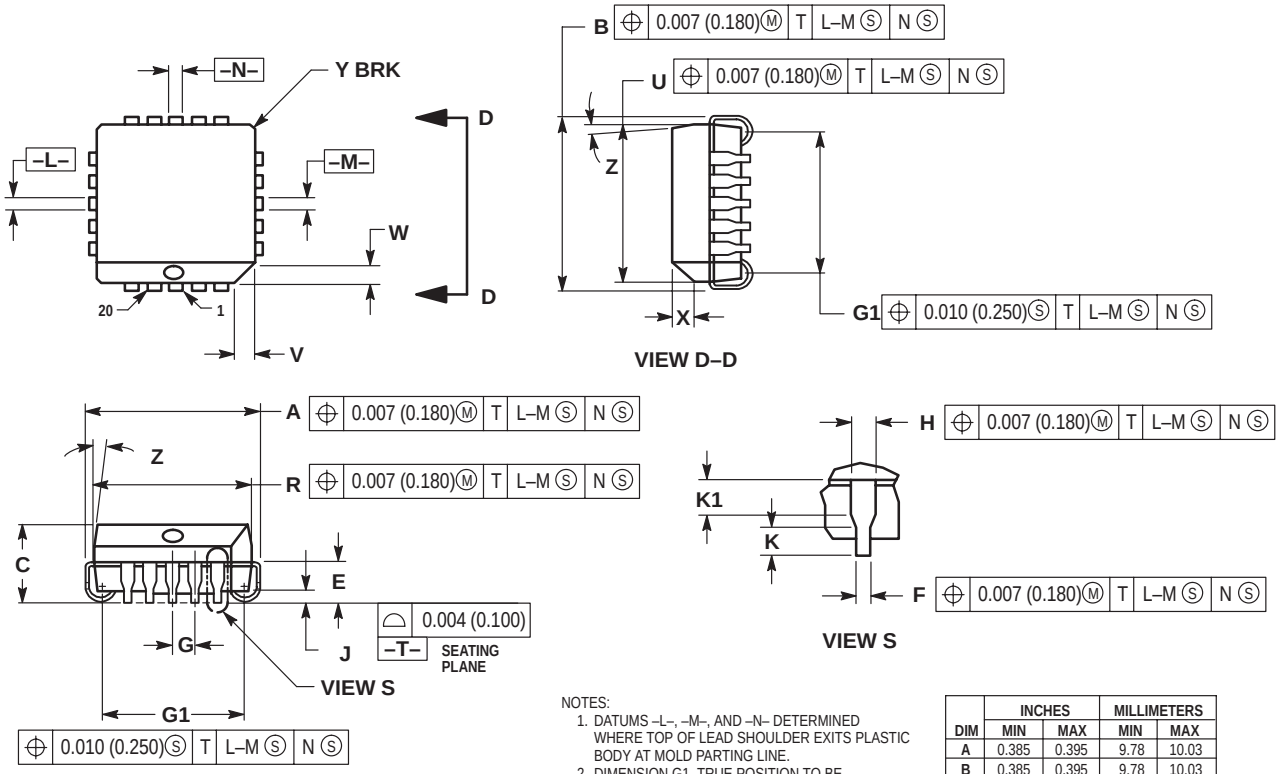

NOTES:
1. DATUMS –L–, –M–, AND –N– DETERMINED WHERE TOP OF LEAD SHOULDER EXITS PLASTIC BODY AT MOLD PARTING LINE.
2. DIMENSION G1, TRUE POSITION TO BE MEASURED AT DATUM –T–, SEATING PLANE.
3. DIMENSIONS R AND U DO NOT INCLUDE MOLD FLASH. ALLOWABLE MOLD FLASH IS 0.010 (0.250) PER SIDE.
4. DIMENSIONING AND TOLERANCING PER ANSI Y14.5M, 1982.
5. CONTROLLING DIMENSION: INCH.
6. THE PACKAGE TOP MAY BE SMALLER THAN THE PACKAGE BOTTOM BY UP TO 0.012 (0.300). DIMENSIONS R AND U ARE DETERMINED AT THE OUTERMOST EXTREMES OF THE PLASTIC BODY EXCLUSIVE OF MOLD FLASH, TIE BAR BURRS, GATE BURRS AND INTERLEAD FLASH, BUT INCLUDING ANY MISMATCH BETWEEN THE TOP AND BOTTOM OF THE PLASTIC BODY.
7. DIMENSION H DOES NOT INCLUDE DAMBAR PROTRUSION OR INTRUSION. THE DAMBAR PROTRUSION(S) SHALL NOT CAUSE THE H DIMENSION TO BE GREATER THAN 0.037 (0.940). THE DAMBAR INTRUSION(S) SHALL NOT CAUSE THE H DIMENSION TO BE SMALLER THAN 0.025 (0.635).

	INCHES		MILLIMETERS	
DIM	MIN	MAX	MIN	MAX
A	0.385	0.395	9.78	10.03
B	0.385	0.395	9.78	10.03
C	0.165	0.180	4.20	4.57
E	0.090	0.110	2.29	2.79
F	0.013	0.019	0.33	0.48
G	0.050 BSC		1.27 BSC	
H	0.026	0.032	0.66	0.81
J	0.020	——	0.51	——
K	0.025	——	0.64	——
R	0.350	0.356	8.89	9.04
U	0.350	0.356	8.89	9.04
V	0.042	0.048	1.07	1.21
W	0.042	0.048	1.07	1.21
X	0.042	0.056	1.07	1.42
Y	——	0.020	——	0.50
Z	2°	10°	2°	10°
G1	0.310	0.330	7.88	8.38
K1	0.040	——	1.02	——

CDIP–16
L SUFFIX
CERAMIC DIP PACKAGE
CASE 620–10
ISSUE T

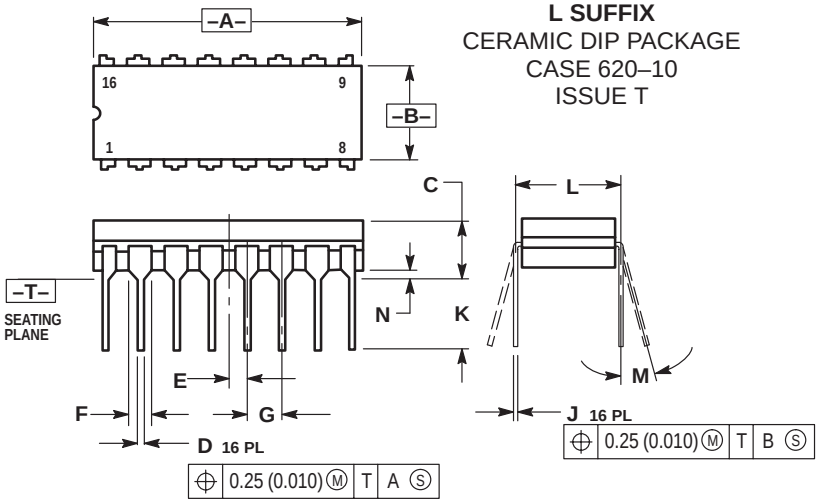

NOTES:
1. DIMENSIONING AND TOLERANCING PER ANSI Y14.5M, 1982.
2. CONTROLLING DIMENSION: INCH.
3. DIMENSION L TO CENTER OF LEAD WHEN FORMED PARALLEL.
4. DIMENSION F MAY NARROW TO 0.76 (0.030) WHERE THE LEAD ENTERS THE CERAMIC BODY.

	INCHES		MILLIMETERS	
DIM	MIN	MAX	MIN	MAX
A	0.750	0.785	19.05	19.93
B	0.240	0.295	6.10	7.49
C	—	0.200	—	5.08
D	0.015	0.020	0.39	0.50
E	0.050 BSC		1.27 BSC	
F	0.055	0.065	1.40	1.65
G	0.100 BSC		2.54 BSC	
H	0.008	0.015	0.21	0.38
K	0.125	0.170	3.18	4.31
L	0.300 BSC		7.62 BSC	
M	0°	15°	0°	15°
N	0.020	0.040	0.51	1.01

PDIP–16
P SUFFIX
PLASTIC DIP PACKAGE
CASE 648–08
ISSUE R

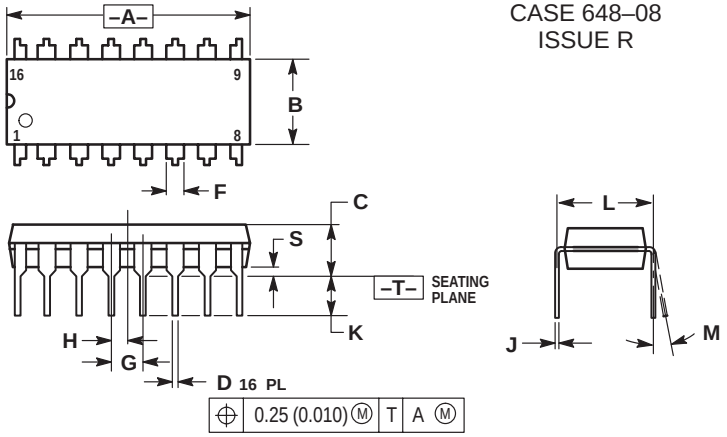

NOTES:
1. DIMENSIONING AND TOLERANCING PER ANSI Y14.5M, 1982.
2. CONTROLLING DIMENSION: INCH.
3. DIMENSION L TO CENTER OF LEADS WHEN FORMED PARALLEL.
4. DIMENSION B DOES NOT INCLUDE MOLD FLASH.
5. ROUNDED CORNERS OPTIONAL.

	INCHES		MILLIMETERS	
DIM	MIN	MAX	MIN	MAX
A	0.740	0.770	18.80	19.55
B	0.250	0.270	6.35	6.85
C	0.145	0.175	3.69	4.44
D	0.015	0.021	0.39	0.53
F	0.040	0.70	1.02	1.77
G	0.100 BSC		2.54 BSC	
H	0.050 BSC		1.27 BSC	
J	0.008	0.015	0.21	0.38
K	0.110	0.130	2.80	3.30
L	0.295	0.305	7.50	7.74
M	0°	10°	0°	10°
S	0.020	0.040	0.51	1.01

PUBLICATION ORDERING INFORMATION

North America Literature Fulfillment:
Literature Distribution Center for ON Semiconductor
P.O. Box 5163, Denver, Colorado 80217 USA
Phone: 303–675–2175 or 800–344–3860 Toll Free USA/Canada
Fax: 303–675–2176 or 800–344–3867 Toll Free USA/Canada
Email: ONlit@hibbertco.com

N. American Technical Support: 800–282–9855 Toll Free USA/Canada

EUROPE: LDC for ON Semiconductor – European Support
German Phone: (+1) 303–308–7140 (M–F 2:30pm to 5:00pm Munich Time)
Email: ONlit–german@hibbertco.com
French Phone: (+1) 303–308–7141 (M–F 2:30pm to 5:00pm Toulouse Time)
Email: ONlit–french@hibbertco.com
English Phone: (+1) 303–308–7142 (M–F 1:30pm to 5:00pm UK Time)
Email: ONlit@hibbertco.com

ASIA/PACIFIC: LDC for ON Semiconductor – Asia Support
Phone: 303–675–2121 (Tue–Fri 9:00am to 1:00pm, Hong Kong Time)
Toll Free from Hong Kong 800–4422–3781
Email: ONlit–asia@hibbertco.com

JAPAN: ON Semiconductor, Japan Customer Focus Center
4–32–1 Nishi–Gotanda, Shinagawa–ku, Tokyo, Japan 141–8549
Phone: 81–3–5740–2745
Email: r14525@onsemi.com

Fax Response Line: 303–675–2167
800–344–3810 Toll Free USA/Canada

ON Semiconductor Website: http://onsemi.com

For additional information, please contact your local Sales Representative.