3A, 23V, 340kHz Synchronous Step-Down Converter

General Description

The RT8250 is a high-efficiency synchronous step-down DC/DC converter that can deliver up to 3A output current from 4.5V to 23V input supply. The RT8250's current mode architecture and external compensation allow the transient response to be optimized over a wide range of loads and output capacitors. Cycle-by-cycle current limit provides protection against shorted outputs and soft-start eliminates input current surge during start-up. The RT8250 also provides output under voltage protection and thermal shutdown protection. The low current (<3μA) shutdown mode provides output disconnection, enabling easy power management in battery-powered systems.

Ordering Information

RT8250 □□

- Package Type
  SP : SOP-8 (Exposed Pad-Option 1)
- Lead Plating System
  G : Green (Halogen Free and Pb Free)

Note :

Richtek products are :

- RoHS compliant and compatible with the current requirements of IPC/JEDEC J-STD-020.
- Suitable for use in SnPb or Pb-free soldering processes.

Marking Information



RT8250GSP : Product Number

YMDNN : Date Code

Features

- **4.5V to 23V Input Voltage Range**
- **1.5% High Accuracy Feedback Voltage**
- **3A Output Current**
- **Integrated N-MOSFET Switches**
- **Current Mode Control**
- **Fixed Frequency Operation : 340kHz**
- **Output Adjustable from 0.925V to 20V**
- **Up to 95% Efficiency**
- **Programmable Soft-Start**
- **Stable with Low-ESR Ceramic Output Capacitors**
- **Cycle-by-Cycle Over Current Protection**
- **Input Under Voltage Lockout**
- **Output Under Voltage Protection**
- **Thermal Shutdown Protection**
- **Thermally Enhanced SOP-8 (Exposed Pad) Package**
- **RoHS Compliant and Halogen Free**

Applications

- Industrial and Commercial Low Power Systems
- Computer Peripherals
- LCD Monitors and TVs
- Green Electronics/Appliances
- Point of Load Regulation of High-Performance DSPs, FPGAs and ASICs.

Pin Configurations

(TOP VIEW)

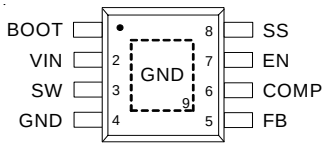

SOP-8 (Exposed Pad)

Typical Application Circuit

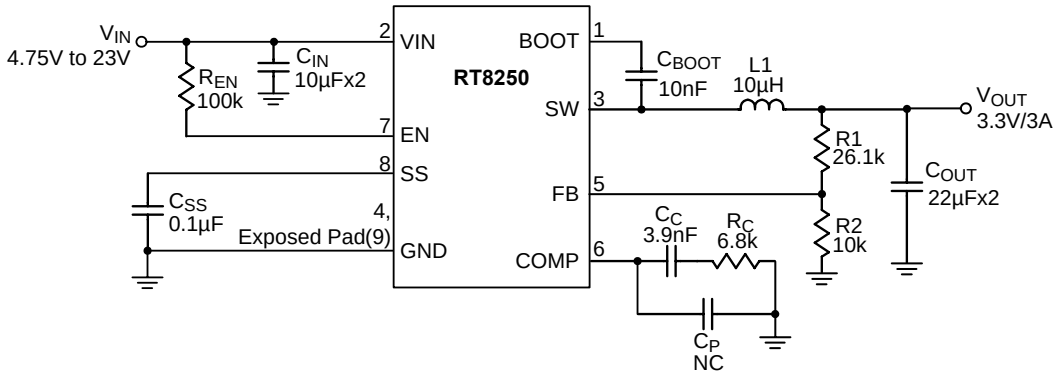

Table 1. Recommended Component Selection

V_{OUT} (V)	R1 (kΩ)	R2 (kΩ)	R_C (kΩ)	C_C (nF)	L (µH)	C_{OUT} (µF)
15	153	10	30	3.9	33	22 x 2
10	97.6	10	20	3.9	22	22 x 2
8	76.8	10	15	3.9	22	22 x 2
5	45.3	10	13	3.9	15	22 x 2
3.3	26.1	10	6.8	3.9	10	22 x 2
2.5	16.9	10	6.2	3.9	6.8	22 x 2
1.8	9.53	10	4.3	3.9	4.7	22 x 2
1.2	3	10	3	3.9	3.6	22 x 2

Functional Pin Description

Pin No.	Pin Name	Pin Function
1	BOOT	Bootstrap for High Side Gate Driver. Connect a 10nF or greater ceramic capacitor from the BOOT pin to SW pin.
2	VIN	Voltage Supply Input. The input voltage range is from 4.5V to 23V. A suitable large capacitor must be bypassed with this pin.
3	SW	Switching Node. Connect the output LC filter between the SW pin and output load.
4, 9 (Exposed Pad)	GND	Ground. The exposed pad must be soldered to a large PCB and connected to GND for maximum power dissipation.
5	FB	Output Voltage Feedback Input. The feedback reference voltage is 0.925V typically.
6	COMP	Compensation Node. This pin is used for compensating the regulation control loop. A series RC network is required to be connected from COMP to GND. If it is needed, an additional capacitor should be connected from COMP to GND.
7	EN	Enable Input. A logic high enables the converter, a logic low forces the converter into shutdown mode reducing the supply current to less than 3µA. For automatic startup, connect this pin to VIN with a 100kΩ pull up resistor.
8	SS	Soft-Start Control Input. The soft-start period can be set by connecting a capacitor from the SS to GND. A 0.1µF capacitor sets the soft-start period to 13ms typically.

Function Block Diagram

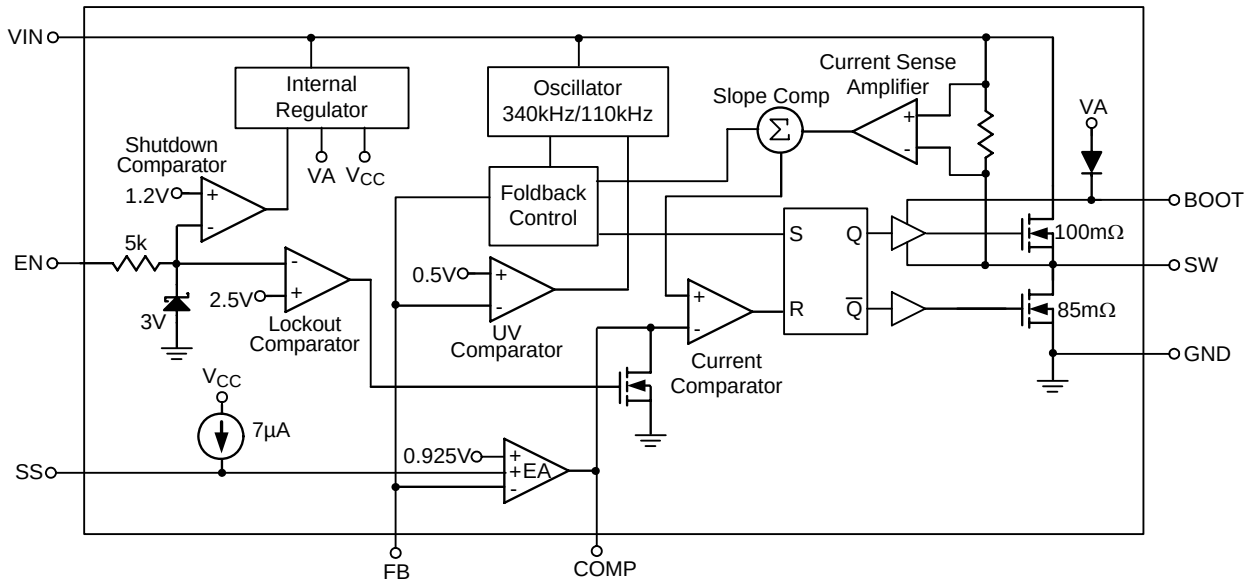

Absolute Maximum Ratings (Note 1)

- Supply Voltage, V_{IN} ---------- –0.3V to 24V
- Switching Voltage, SW ---------- –0.3V to (V_{IN} + 0.3V)
  <20ns ---------- –0.3V to (V_{IN} + 3V)
- BOOT Voltage ---------- (V_{SW} – 0.3V) to (V_{SW} + 6V)
- The Other Pins ---------- –0.3V to 6V
- Power Dissipation, P_D @ T_A = 25°C
  SOP-8 (Exposed Pad) ---------- 1.333W
- Package Thermal Resistance (Note 2)
  SOP-8 (Exposed Pad), θ_{JA} ---------- 75°C/W
  SOP-8 (Exposed Pad), θ_{JC} ---------- 15°C/W
- Junction Temperature ---------- 150°C
- Lead Temperature (Soldering, 10 sec.) ---------- 260°C
- Storage Temperature Range ---------- –65°C to 150°C
- ESD Susceptibility (Note 3)
  HBM (Human Body Mode) ---------- 2kV
  MM (Machine Mode) ---------- 200V

Recommended Operating Conditions (Note 4)

- Supply Voltage, V_{IN} ---------- 4.5V to 23V
- Enable Voltage, V_{EN} ---------- 0V to 5.5V
- Junction Temperature Range ---------- –40°C to 125°C
- Ambient Temperature Range ---------- –40°C to 85°C

Electrical Characteristics

(V_{IN} = 12V, T_A = 25°C unless otherwise specified)

Parameter		Symbol	Test Conditions	Min	Typ	Max	Unit
Shutdown Supply Current			V_{EN} = 0V	--	0.3	3	μA
Supply Current			V_{EN} = 3 V, V_{FB} = 1V	--	0.7	1.2	mA
Feedback Voltage		V_{FB}	4.75V ≤ V_{IN} ≤ 23V	0.911	0.925	0.939	V
Error Amplifier Transconductance		G_{EA}	ΔIC = ±10μA	--	1250	--	μA/V
High-Side Switch On-Resistance		$R_{DS(ON)1}$		--	100	--	mΩ
Low-Side Switch On-Resistance		$R_{DS(ON)2}$		--	85	--	mΩ
High-Side Switch Leakage Current			V_{EN} = 0V, V_{SW} = 0V	--	0	10	μA
Upper Switch Current Limit			Min. Duty Cycle V_{BOOT} – V_{SW} = 4.8V	--	5.5	--	A
Lower Switch Current Limit			From Drain to Source	--	1.4	--	A
COMP to Current Sense Transconductance		G_{CS}		--	5.2	--	A/V
Oscillation Frequency		f_{OSC1}		300	340	380	kHz
Short Circuit Oscillation Frequency		f_{OSC2}	V_{FB} = 0V	--	110	--	kHz
Maximum Duty Cycle		D_{MAX}	V_{FB} = 0.8V	--	90	--	%
Minimum On Time		t_{ON}		--	200	--	ns
EN Threshold Voltage	Logic-High	V_{IH}		2.7	--	--	V
	Logic-Low	V_{IL}		--	--	0.4	
Input Under Voltage Lockout Threshold			V_{IN} Rising	3.8	4.2	4.4	V
Input Under Voltage Lockout Threshold Hysterisis				--	200	--	mV
Soft-Start Current			V_{SS} = 0V	--	7	--	μA
Soft-Start Period			C_{SS} = 0.1μF	--	13	--	ms
Thermal Shutdown		T_{SD}		--	150	--	°C

Note 1. Stresses listed as the above "Absolute Maximum Ratings" may cause permanent damage to the device. These are for stress ratings. Functional operation of the device at these or any other conditions beyond those indicated in the operational sections of the specifications is not implied. Exposure to absolute maximum rating conditions for extended periods may remain possibility to affect device reliability.

Note 2. θ_{JA} is measured in the natural convection at T_A = 25°C on a high effective thermal conductivity four-layer test board of JEDEC 51-7 thermal measurement standard. The case position of θ_{JC} is on the exposed pad of the package.

Note 3. Devices are ESD sensitive. Handling precaution is recommended.

Note 4. The device is not guaranteed to function outside its operating conditions.

Typical Operating Characteristics

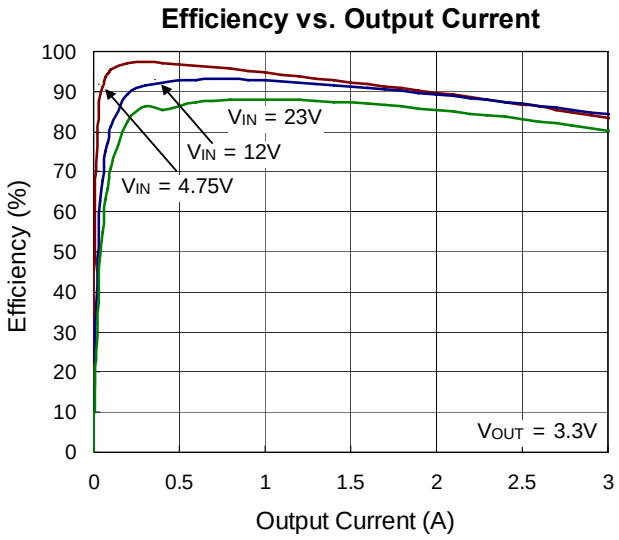

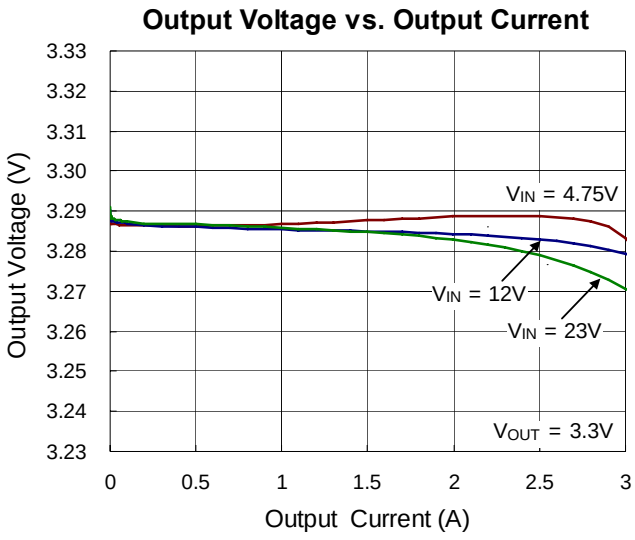

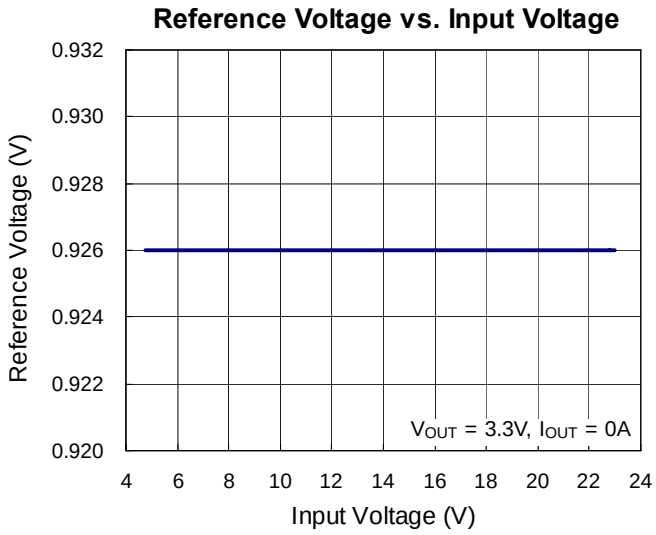

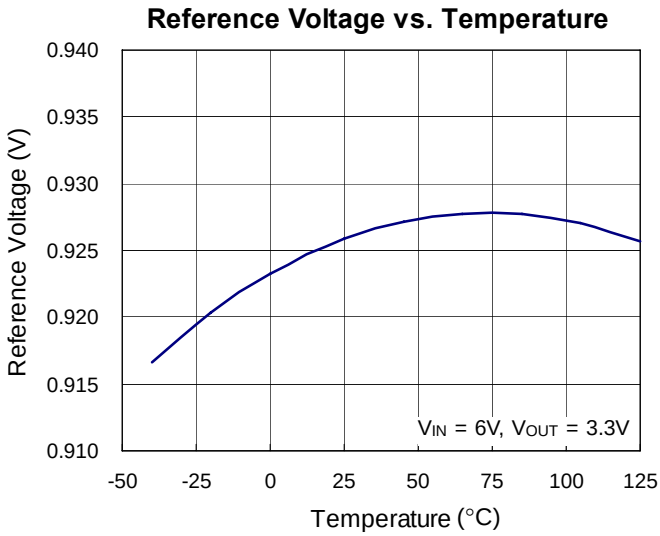

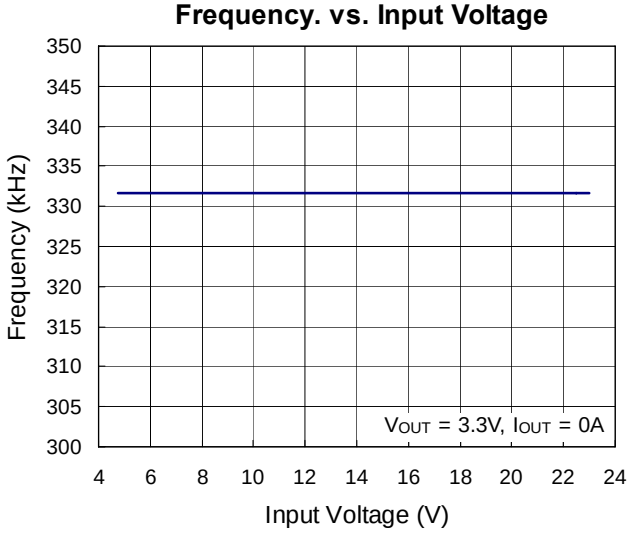

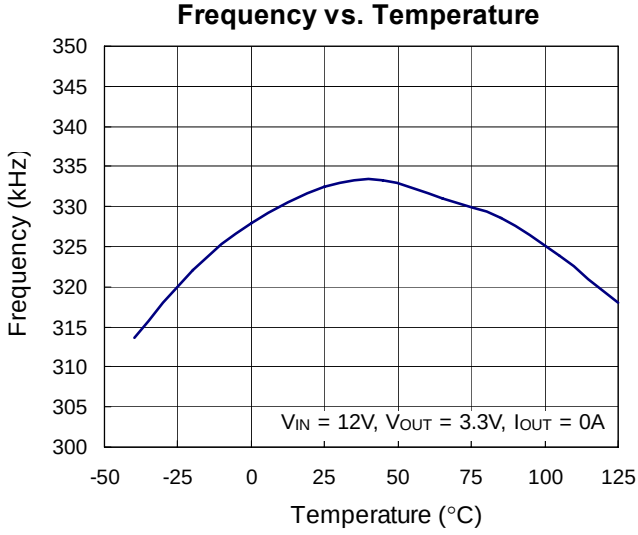

Current Limit vs. Duty Cycle

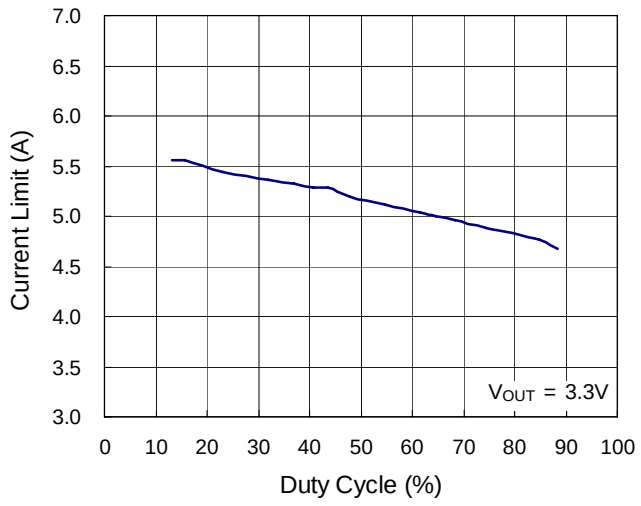

Current Limit vs. Temperature

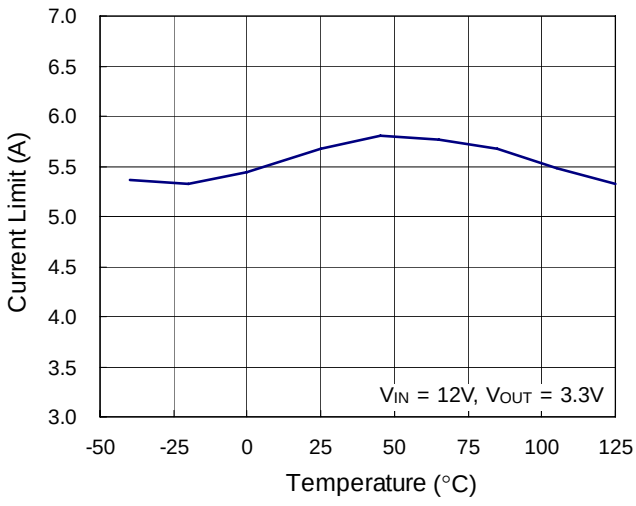

Power On from EN

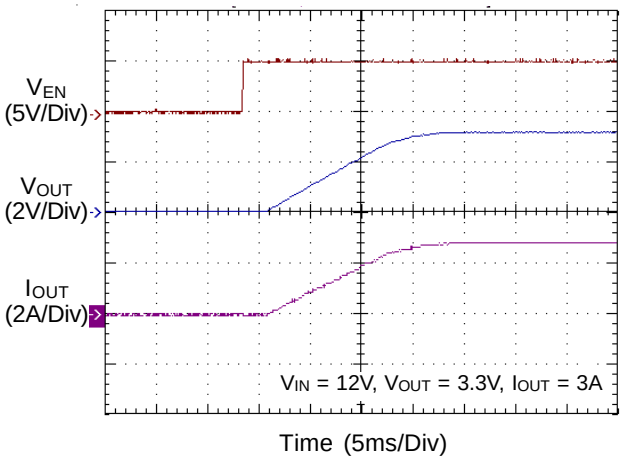

Power Off from EN

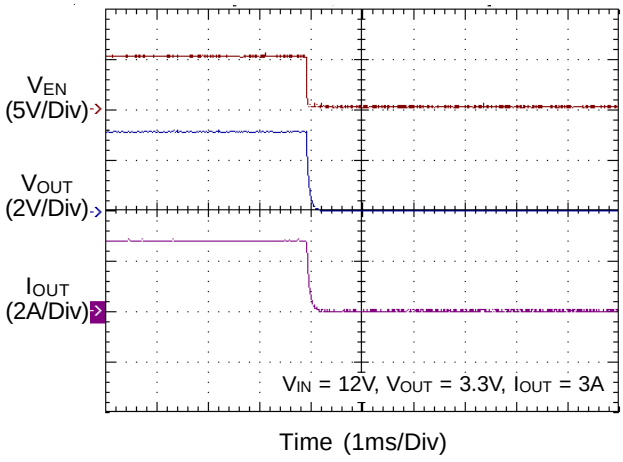

Power On from V_{IN}

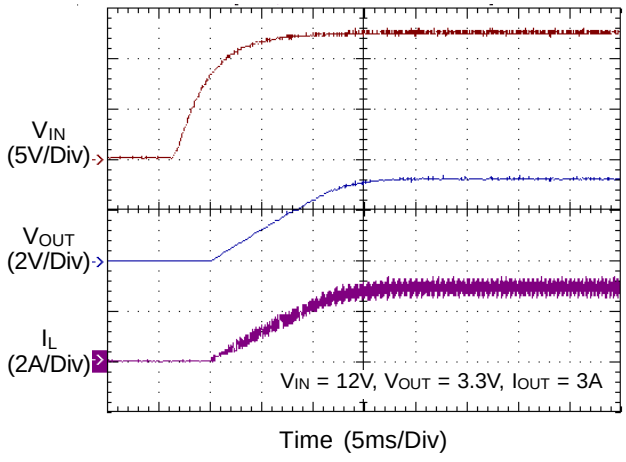

Switching

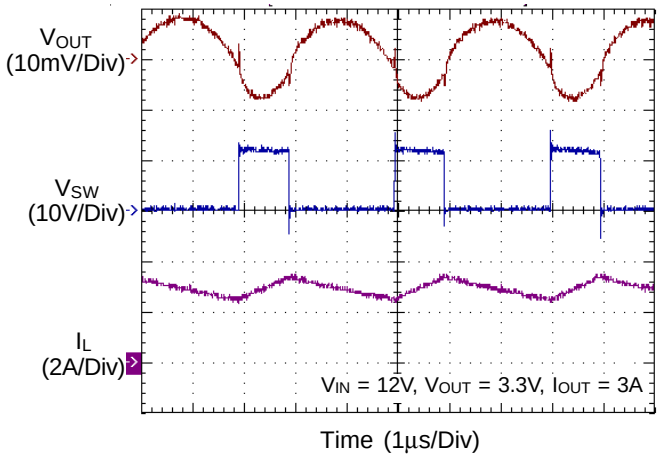

Load Transient Response

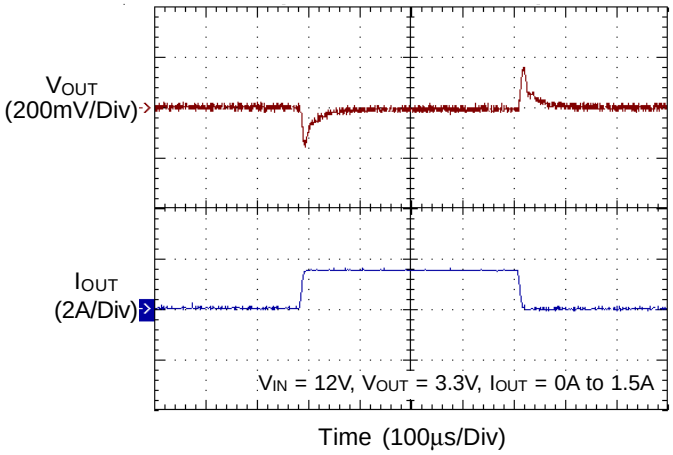

Load Transient Response

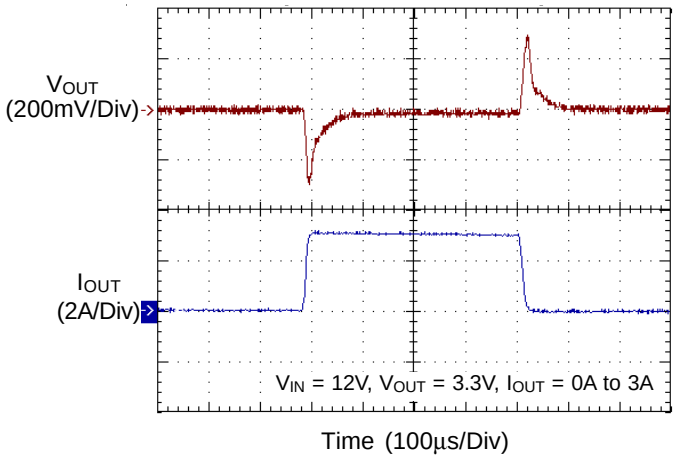

Application Information

The RT8250 is a synchronous high voltage buck converter that can support the input voltage range from 4.5V to 23V and the output current can be up to 3A.

Output Voltage Setting

The resistive divider allows the FB pin to sense the output voltage as shown in Figure 1.

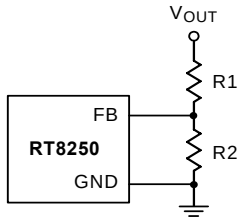

Figure 1. Output Voltage Setting

The output voltage is set by an external resistive divider according to the following equation :

$$V_{OUT} = V_{FB}\left(1+\frac{R1}{R2}\right)$$

Where V_{FB} is the feedback reference voltage (0.925V typ.).

External Bootstrap Diode

Connect a 10nF low ESR ceramic capacitor between the BOOT pin and SW pin. This capacitor provides the gate driver voltage for the high side MOSFET.

It is recommended to add an external bootstrap diode between an external 5V and the BOOT pin for efficiency improvement when input voltage is lower than 5.5V or duty ratio is higher than 65%. The bootstrap diode can be a low cost one such as 1N4148 or BAT54.

The external 5V can be a 5V fixed input from system or a 5V output of the RT8250. Note that the external boot voltage must be lower than 5.5V.

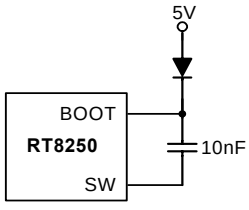

Figure 2. External Bootstrap Diode

Soft-Start

The RT8250 contains an external soft-start clamp that gradually raises the output voltage. The soft-start timming can be programed by the external capacitor between SS pin and GND. The chip provides a 7μA charge current for the external capacitor. If a 0.1μF capacitor is used to set the soft-start and its period will be 13ms(typ.).

Inductor Selection

The inductor value and operating frequency determine the ripple current according to a specific input and output voltage. The ripple current ΔI_L increases with higher V_{IN} and decreases with higher inductance.

$$\Delta I_L = \left[\frac{V_{OUT}}{f \times L}\right] \times \left[1-\frac{V_{OUT}}{V_{IN}}\right]$$

Having a lower ripple current reduces not only the ESR losses in the output capacitors but also the output voltage ripple. High frequency with small ripple current can achieve highest efficiency operation. However, it requires a large inductor to achieve this goal.

For the ripple current selection, the value of ΔI_L = 0.2375(I_{MAX}) will be a reasonable starting point. The largest ripple current occurs at the highest V_{IN}. To guarantee that the ripple current stays below the specified maximum, the inductor value should be chosen according to the following equation :

$$L = \left[\frac{V_{OUT}}{f \times \Delta I_{L(MAX)}}\right] \times \left[1-\frac{V_{OUT}}{V_{IN(MAX)}}\right]$$

Inductor Core Selection

The inductor type must be selected once the value for L is known. Generally speaking, high efficiency converters can not afford the core loss found in low cost powdered iron cores. So, the more expensive ferrite or mollypermalloy cores will be a better choice.

The selected inductance rather than the core size for a fixed inductor value is the key for actual core loss. As the inductance increases, core losses decrease. Unfortunately, increase of the inductance requires more turns of wire and therefore the copper losses will increase.

Ferrite designs are preferred at high switching frequency due to the characteristics of very low core losses. So, design goals can focus on the reduction of copper loss and the saturation prevention.

Ferrite core material saturates "hard", which means that inductance collapses abruptly when the peak design current is exceeded. The previous situation results in an abrupt increase in inductor ripple current and consequent output voltage ripple.

Do not allow the core to saturate!

Different core materials and shapes will change the size/ current and price/current relationship of an inductor.

Toroid or shielded pot cores in ferrite or permalloy materials are small and do not radiate energy. However, they are usually more expensive than the similar powdered iron inductors. The rule for inductor choice mainly depends on the price vs. size requirement and any radiated field/ EMI requirements.

C_{IN} and C_{OUT} Selection

The input capacitance, $C_{IN,}$ is needed to filter the trapezoidal current at the source of the high side MOSFET. To prevent large ripple current, a low ESR input capacitor sized for the maximum RMS current should be used. The RMS current is given by :

$$I_{RMS} = I_{OUT(MAX)} \frac{V_{OUT}}{V_{IN}} \sqrt{\frac{V_{IN}}{V_{OUT}} - 1}$$

This formula has a maximum at $V_{IN} = 2V_{OUT}$, where $I_{RMS} = I_{OUT}/2$. This simple worst-case condition is commonly used for design because even significant deviations do not offer much relief.

Choose a capacitor rated at a higher temperature than required. Several capacitors may also be paralleled to meet size or height requirements in the design.

For the input capacitor, a 10µF x 2 low ESR ceramic capacitor is recommended. For the recommended capacitor, please refer to table 3 for more detail.

The selection of C_{OUT} is determined by the required ESR to minimize voltage ripple.

Moreover, the amount of bulk capacitance is also a key for C_{OUT} selection to ensure that the control loop is stable. Loop stability can be checked by viewing the load transient response as described in a later section.

The output ripple, ΔV_{OUT}, is determined by :

$$\Delta V_{OUT} \leq \Delta I_L \left[ESR + \frac{1}{8fC_{OUT}} \right]$$

The output ripple will be highest at the maximum input voltage since ΔI_L increases with input voltage. Multiple capacitors placed in parallel may be needed to meet the ESR and RMS current handling requirement. Dry tantalum, special polymer, aluminum electrolytic and ceramic capacitors are all available in surface mount packages. Special polymer capacitors offer very low ESR value. However, it provides lower capacitance density than other types. Although Tantalum capacitors have the highest capacitance density, it is important to only use types that pass the surge test for use in switching power supplies. Aluminum electrolytic capacitors have significantly higher ESR. However, it can be used in cost-sensitive applications for ripple current rating and long term reliability considerations. Ceramic capacitors have excellent low ESR characteristics but can have a high voltage coefficient and audible piezoelectric effects. The high Q of ceramic capacitors with trace inductance can also lead to significant ringing.

Higher values, lower cost ceramic capacitors are now becoming available in smaller case sizes. Their high ripple current, high voltage rating and low ESR make them ideal for switching regulator applications. However, care must be taken when these capacitors are used at input and output. When a ceramic capacitor is used at the input and the power is supplied by a wall adapter through long wires, a load step at the output can induce ringing at the input, V_{IN}. At best, this ringing can couple to the output and be mistaken as loop instability. At worst, a sudden inrush of current through the long wires can potentially cause a voltage spike at V_{IN} large enough to damage the part.

Checking Transient Response

The regulator loop response can be checked by looking at the load transient response. Switching regulators take several cycles to respond to a step in load current. When a load step occurs, V_{OUT} immediately shifts by an amount equal to ΔI_{LOAD} (ESR) also begins to charge or discharge C_{OUT} generating a feedback error signal for the regulator to return V_{OUT} to its steady-state value. During this recovery time, V_{OUT} can be monitored for overshoot or ringing that would indicate a stability problem.

Thermal Considerations

For continuous operation, do not exceed the maximum operation junction temperature 125°C. The maximum power dissipation depends on the thermal resistance of IC package, PCB layout, the rate of surroundings airflow and temperature difference between junction to ambient. The maximum power dissipation can be calculated by following formula :

$P_{D(MAX)} = (T_{J(MAX)} - T_A) / \theta_{JA}$

Where $T_{J(MAX)}$ is the maximum operation junction temperature, T_A is the ambient temperature and the θ_{JA} is the junction to ambient thermal resistance.

For recommended operating conditions specification of RT8250, the maximum junction temperature is 125°C. The junction to ambient thermal resistance θ_{JA} is layout dependent. For PSOP-8 package, the thermal resistance θ_{JA} is 75°C/W on the standard JEDEC 51-7 four-layers thermal test board. The maximum power dissipation at T_A = 25°C can be calculated by following formula :

$P_{D(MAX)}$ = (125°C – 25°C) / (75°C/W) = 1.333W for PSOP-8 package

The maximum power dissipation depends on operating ambient temperature for fixed $T_{J(MAX)}$ and thermal resistance θ_{JA}. For RT8250 package, the Figure 3 of derating curve allows the designer to see the effect of rising ambient temperature on the maximum power dissipation allowed.

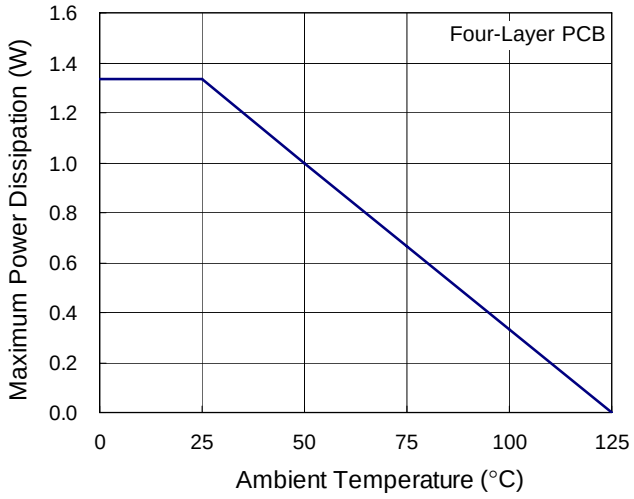

Figure 3. Derating Curve for RT8250 Package

Layout Consideration

Follow the PCB layout guidelines for optimal performance of the RT8250.

- Keep the traces of the main current paths as short and wide as possible.
- Put the input capacitor as close as possible to the device pins (VIN and GND).
- SW node is with high frequency voltage swing and should be kept at small area. Keep sensitive components away from the SW node to prevent stray capacitive noise pick-up.
- Place the feedback components to the FB pin and COMP pin as close as possible.
- The GND pin and Exposed Pad should be connected to a strong ground plane for heat sinking and noise protection.

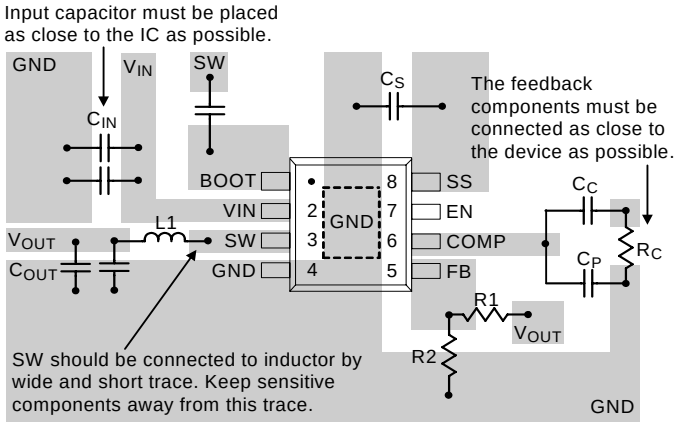

Figure 4. PCB Layout Guide

Table 2. Suggested Inductors for Typical Application Circuit

Component Supplier	Series	Dimensions (mm)
TDK	VLF10045	10 x 9.7 x 4.5
TAIYO YUDEN	NR8040	8x8x4

Table 3. Suggested Capacitors for C_{IN} and C_{OUT}

Component Supplier	Part No.	Capacitance (µF)	Case Size
MURATA	GRM31CR61E106K	10	1206
TDK	C3225X5R1E106K	10	1206
TAIYO YUDEN	TMK316BJ106ML	10	1206
MURATA	GRM31CR60J476M	47	1206
TDK	C3225X5R0J476M	47	1210
TAIYO YUDEN	EMK325BJ476MM	47	1210
MURATA	GRM32ER71C226M	22	1210
TDK	C3225X5R1C226M	22	1210

Outline Dimension

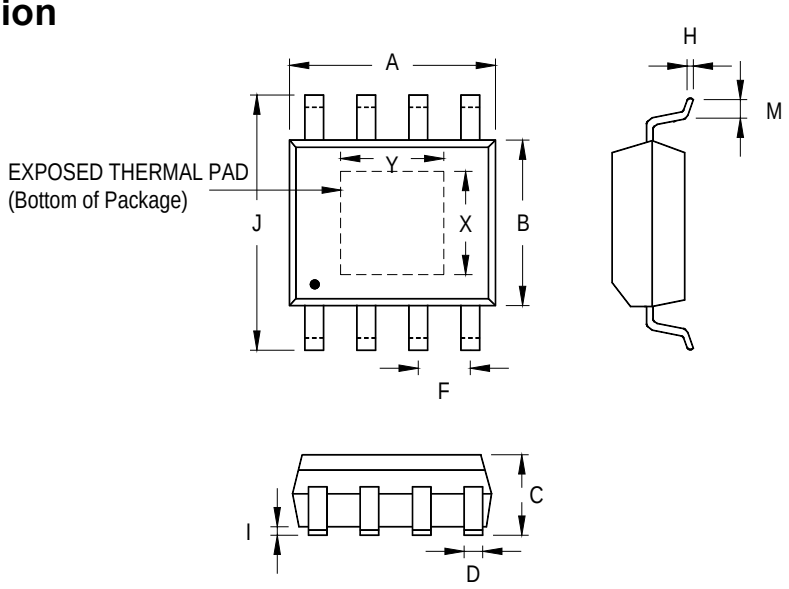

Symbol		Dimensions In Millimeters		Dimensions In Inches	
		Min	Max	Min	Max
A		4.801	5.004	0.189	0.197
B		3.810	4.000	0.150	0.157
C		1.346	1.753	0.053	0.069
D		0.330	0.510	0.013	0.020
F		1.194	1.346	0.047	0.053
H		0.170	0.254	0.007	0.010
I		0.000	0.152	0.000	0.006
J		5.791	6.200	0.228	0.244
M		0.406	1.270	0.016	0.050
Option 1	X	2.000	2.300	0.079	0.091
	Y	2.000	2.300	0.079	0.091
Option 2	X	2.100	2.500	0.083	0.098
	Y	3.000	3.500	0.118	0.138

8-Lead SOP (Exposed Pad) Plastic Package

Richtek Technology Corporation

Headquarter
5F, No. 20, Taiyuen Street, Chupei City
Hsinchu, Taiwan, R.O.C.
Tel: (8863)5526789 Fax: (8863)5526611

Richtek Technology Corporation

Taipei Office (Marketing)
5F, No. 95, Minchiuan Road, Hsintien City
Taipei County, Taiwan, R.O.C.
Tel: (8862)86672399 Fax: (8862)86672377
Email: marketing@richtek.com

Information that is provided by Richtek Technology Corporation is believed to be accurate and reliable. Richtek reserves the right to make any change in circuit design, specification or other related things if necessary without notice at any time. No third party intellectual property infringement of the applications should be guaranteed by users when integrating Richtek products into any application. No legal responsibility for any said applications is assumed by Richtek.