M51953A,B/M51954A,B

VOLTAGE DETECTING, SYSTEM RESETTING IC SERIES

DESCRIPTION

M51953A,B/M51954A,B are semiconductor integrated circuits ideal for detecting supply voltage and resetting all types of logic circuits such as CPUs.

They include a built-in delay circuit to provide the desired retardation time simply by adding an external capacitor.

They find extensive applications, including circuits for battery checking, level detecting and waveform shaping.

FEATURES

- Few external parts
- Large delay time with a capacitor of small capacitance ($t_d \approx$ 100ms, at 0.33μF) (M51953, M51954)
- Low threshold operating voltage (Supply voltage to keep low-state at low supply voltage) . . . . . 0.6V (TYP.) at R_L = 22kΩ
- Wide supply voltage range . . . . . 2 ~ 17V
- Sudden change in power supply has minimal effect on the ICs
- Wide application range
- SIL package of the same height as DIP (5-pin SIP)

APPLICATION

Reset circuit of Pch, Nch, CMOS, microcomputer, CPU and microcomputer, Reset of logic circuit, Battery check circuit, Switching circuit back-up voltage, Level detecting circuit, Waveform shaping circuit, Delay waveform generating circuit, DC-DC converter, Over voltage protection circuit.

RECOMMENDED OPERATING CONDITION

Supply voltage range . . . . . 2 ~ 17V

PIN CONFIGURATION (TOP VIEW)

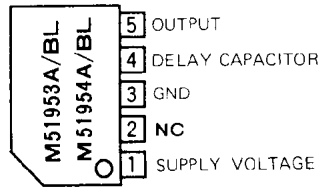

Outline 5P5T

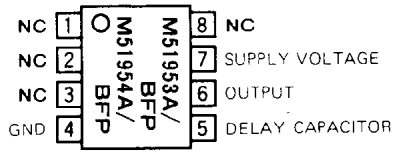

Outline 8P2S-A

NC: NO CONNECTION

BLOCK DIAGRAM

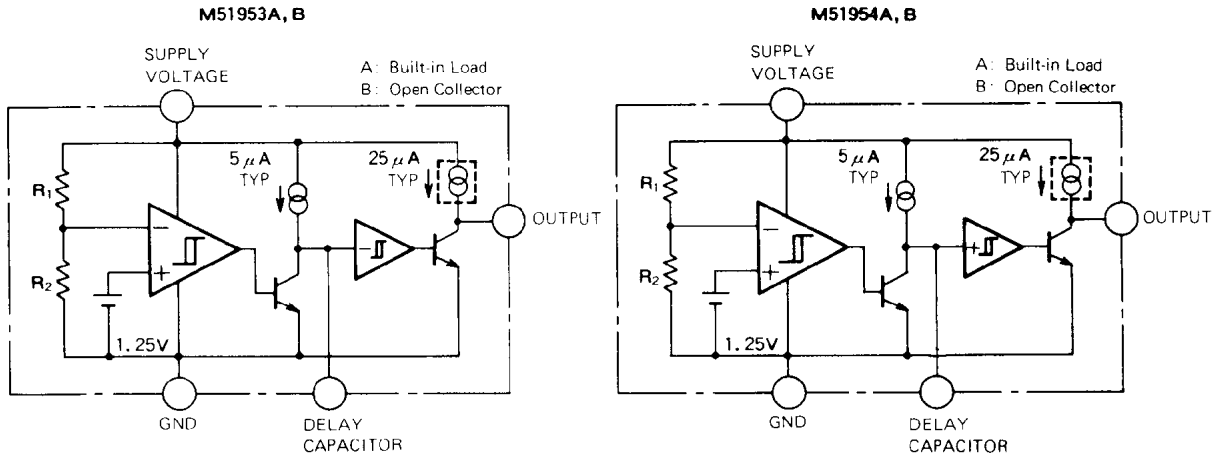

MITSUBISHI ELECTRIC

VOLTAGE DETECTING, SYSTEM RESETTING IC SERIES

FUNCTION DIAGRAM

M51953A, B

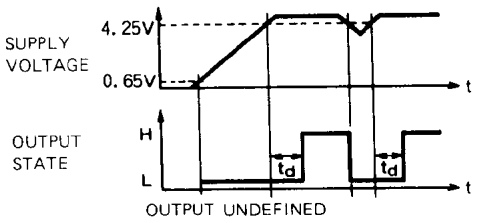

$t_d \approx 0.34 \times C_d(pF)\ \mu sec$

M51954A, B

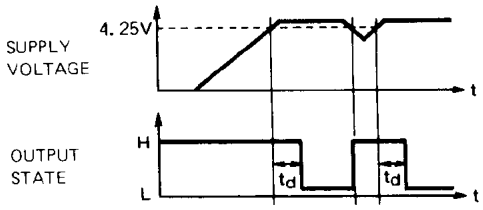

$t_d \approx 0.34 \times C_d(pF)\ \mu sec$

ABSOLUTE MAXIMUM RATINGS (Ta = 25℃, unless otherwise noted)

Symbol	Parameter	Conditions		Ratings	Unit
V_{CC}	Supply voltage			18	V
I_{sink}	Output Sink Current			6	mA
V_O	Output voltage	A Type (Output with constant current load)		V_{CC}	V
		B Type (Open collector output)		18	
P_d	Power dissipation	5P SIL		450	mW
		8P FLAT		300	
K_θ	Thermal Derating	Ta ≥ 25℃	5P SIL	4.5	mW/℃
			8P FLAT	3	
T_{opr}	Operating temperature			−30 ~ +85	℃
T_{stg}	Storage temperature			−40 ~ +125	℃

ELECTRICAL CHARACTERISTICS (Ta = 25℃, unless otherwise noted)

"L" reset type	"H" reset type
M51953A	**M51954A**
M51953B	**M51954B**

Symbol	Parameter	Test conditions		Limits Min	Limits Typ	Limits Max	Unit
V_S	Detecting voltage			4.05	4.25	4.45	V
ΔV_S	Hysterisis voltage			30	50	80	mV
$V_S/\Delta T$	Detecting voltage Temperature Coefficient			—	0.01	—	%/℃
I_{CC}	Circuit Current	Type A V_{CC} = 5V		—	450	680	μA
		Type B V_{CC} = 5V		—	420	630	
t_{pd}	Delay Time	Ta = −30 ~ +85℃, C_d = 0.01μF (Note)		1.6	3.4	7	ms
I_{pd}	Constant Current	V_{CC} = 5V		−8	−5	−3	μA
V_{sat}	Output Saturation Voltage	L reset type V_{CC} = 4V, I_{sink} = 4mA		—	0.2	0.4	V
		H reset type V_{CC} = 5V, I_{sink} = 4mA					
V_{OPL}	Threshold Operating Voltage	L reset type Minimum supply voltage for IC operation	R_L = 2.2kΩ, V_{sat} ≦ 0.4V	—	0.67	0.8	V
			R_L = 100kΩ, V_{sat} ≦ 0.4V	—	0.55	0.7	
I_{OH}	Output Leak Current	Type B		—	—	30	nA
		Type B, Ta = −30 ~ +85℃		—	—	1	μA
I_{OC}	Output Load Current	Type A V_{CC} = 5V, V_O = 1/2V_{CC}		−40	−25	−17	μA
V_{OH}	Output High Voltage	Type A		V_{CC} − 0.2	V_{CC} − 0.06	—	V

Note: Delay time can be changed by changing delay capacitor for external capacitor types.
(Please refer to typical characteristics)

TYPICAL CHARACTERISTICS

TYPICAL CHARACTERISTICS THERMAL DERATING (MAXIMUM RATING)

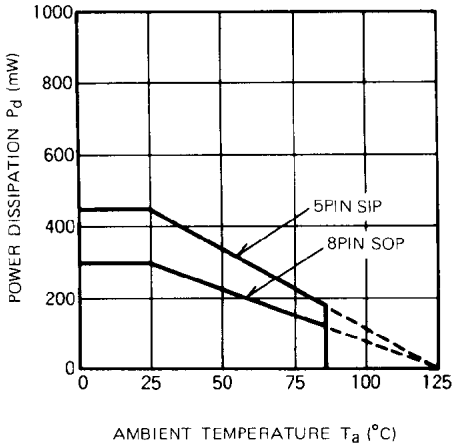

DETECTING VOLTAGE VS. AMBIENT TEMPERATURE (Supply voltage detecting series)

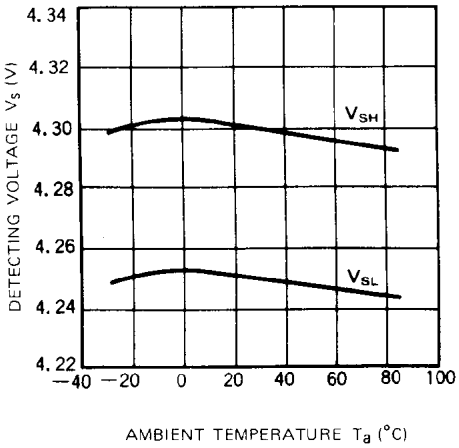

DELAY CAPACITANCE VS. DELAY TIME (M5195XX, External delay capacitor type)

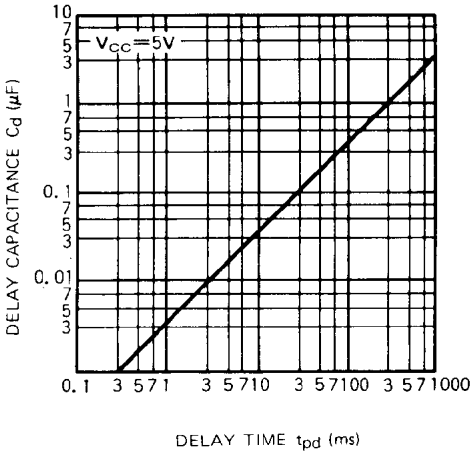

DELAY TIME VS. AMBIENT TEMPERATURE (M5195XX, External delay capacitor type)

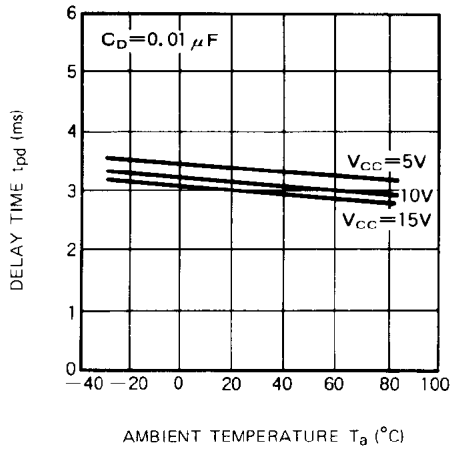

CONSTANT CURRENT AT Cd PIN VS. AMBIENT TEMPERATURE (M5195XX, External delay capacitor type)

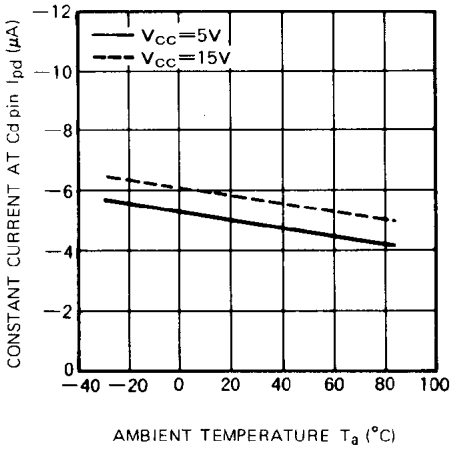

THRESHOLD OPERATING VOLTAGE ([L] reset type)

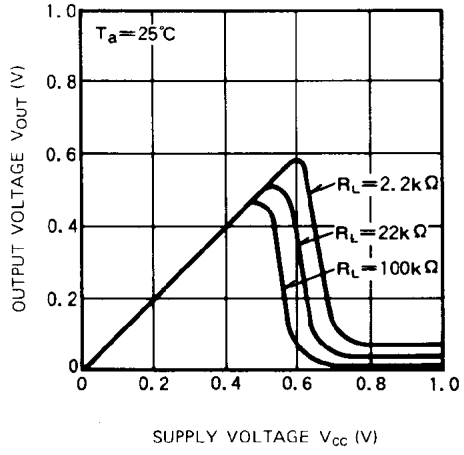

OUTPUT SATURATION VOLTAGE VS. OUTPUT SINK CURRENT

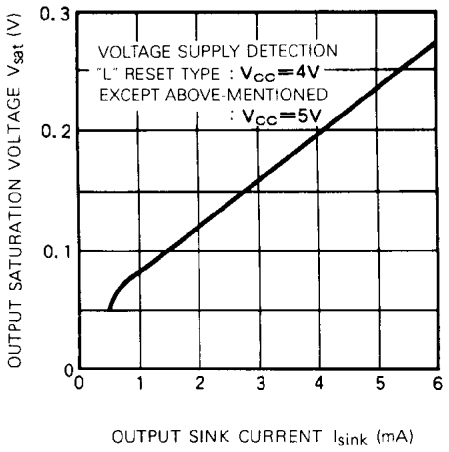

OUTPUT LOAD CURRENT VS. OUTPUT VOLTAGE (M519XXA)

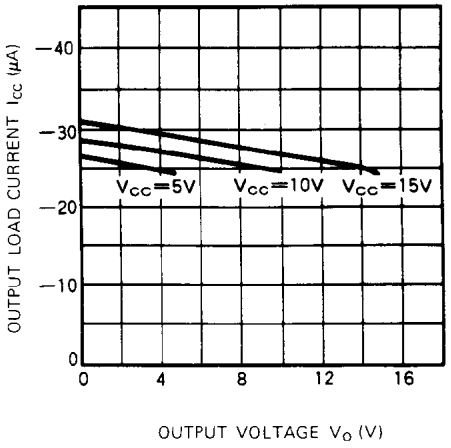

CIRCUIT CURRENT VS. AMBIENT TEMPERATURE (M51953B, M51954B)

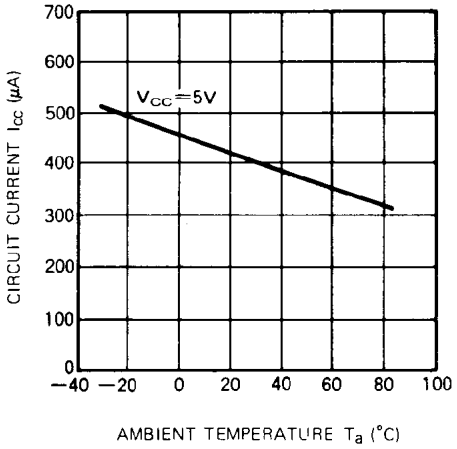

EXAMPLE OF APPLICATION CIRCUIT

M5195XX Series Reset Circuit

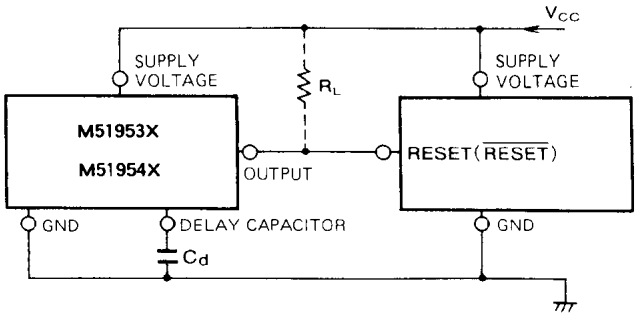

Note 1. When the detecting supply voltage is 4.25V, M51951, M51952, M51953 and M51954 are used. In this case, R_1 and R_2 are not necessary.
When the voltage is anything except 4.25V, M51955, M51956, M51957 and M51958 are used. In this case, the detecting supply voltage is $1.25 \times \frac{(R_1 + R_2)}{R_2}$ (V) approximately. The detecting supply voltage can be set between 2V and 15V.

Note 2. When the delay time is short, M51951, M51952, M51955 and M51956 are available. These ICs have a delay capacity and the delay time is about 200μs.
If a longer delay time is necessary, M51953, M51954, M51957 and M51958 are used. In this case, the delay time is about 0.34 x Cd (pF) μsec.

Note 3. If M5195XX and the logic circuit have a common power supply, type A (built-in load type) can be applied whether a pull-up resister is included in the logic circuit or not.

Note 4. The logic circuit preferably should not have a pull-down resistor, but if one is present, add load resistor R_L to overcome the pull-down resistor.

Note 5. When the reset terminal in the logic circuit is of the low reset type, M51951, M51953, M51955 and M51957 are used and when the terminal is of the high reset type, M51952, M51954, M51956 and M51958 are used.

Note 6. When a negative supply voltage is used, supply voltage side of M5195XX and the GND side are connected to negative supply voltage respectively.

Case of Using Other Reset Signal except Supply Voltage in the M5195XX Series

(a) Reset at ON

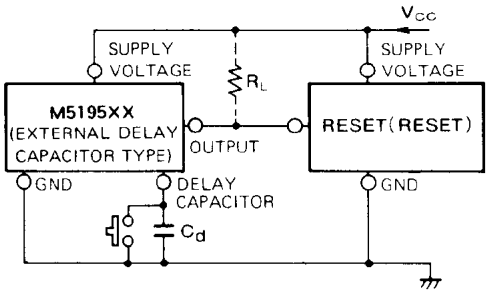

RESET AT ON

(b) Reset at transistor ON

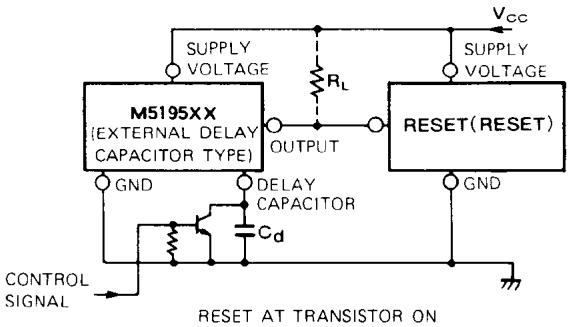

RESET AT TRANSISTOR ON